PROFILE	M-PART NAME / RAW MATERIAL NUMBER	DESCRIPTION	CODE:
		HC300 SPEC SHEET	

REVISIONS	INITIALS	DATE
1		
2		
3		
4		
5		
6		
7		
8		
9		
10		
11		
12		
13		
14		

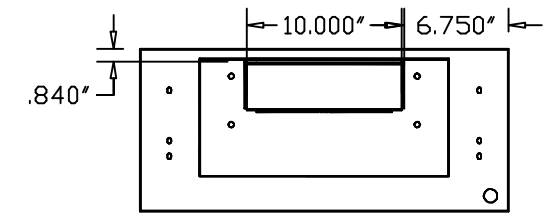

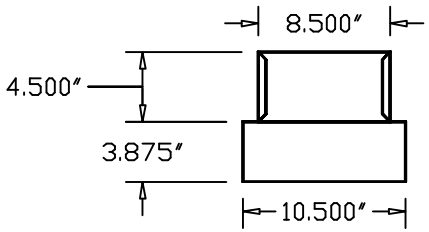

SIDE VIEW

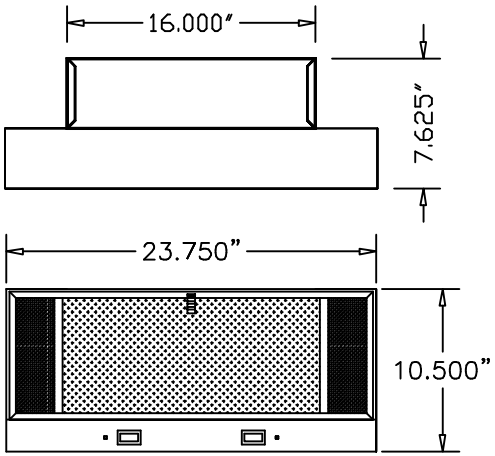

HC300 BLOWER

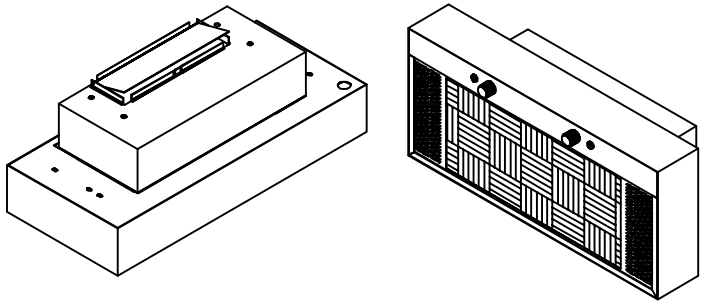

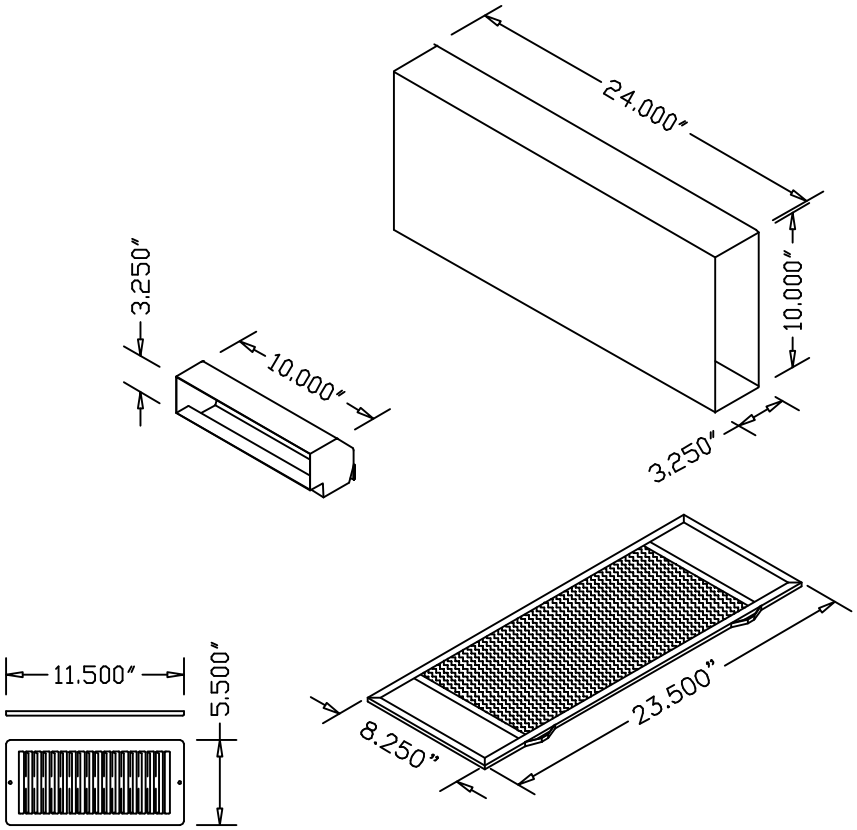

HC300 DCK

DO NOT USE THIS DRAWING

IF THERE IS A NUMBER IN THIS BOX,

F

INFORMATION IN THE BOX INDICATES THAT THE DRAWING IS UNDERGOING REVISION AT THIS TIME AND MAY CONTAIN INCORRECT INFORMATION.

LENGTH NUMBER	"A"	EQ / NE

DRAWN BY:	DATE:		TOLERANCE OPTIONS UNLESS OTHERWISE SPECIFIED.		DRAWING NUMBER:
DCH	01/23/03	Hoffco, Inc.	EQ = ALL DIMS ±.007 NE = PROFILE DIMS ±.007 "A" DIMS +1.000 -.000	STANDARD DIMENSIONS ARE ±.020 METRIC DIMENSIONS ARE ±.5MM	HC300 SPEC SHEET